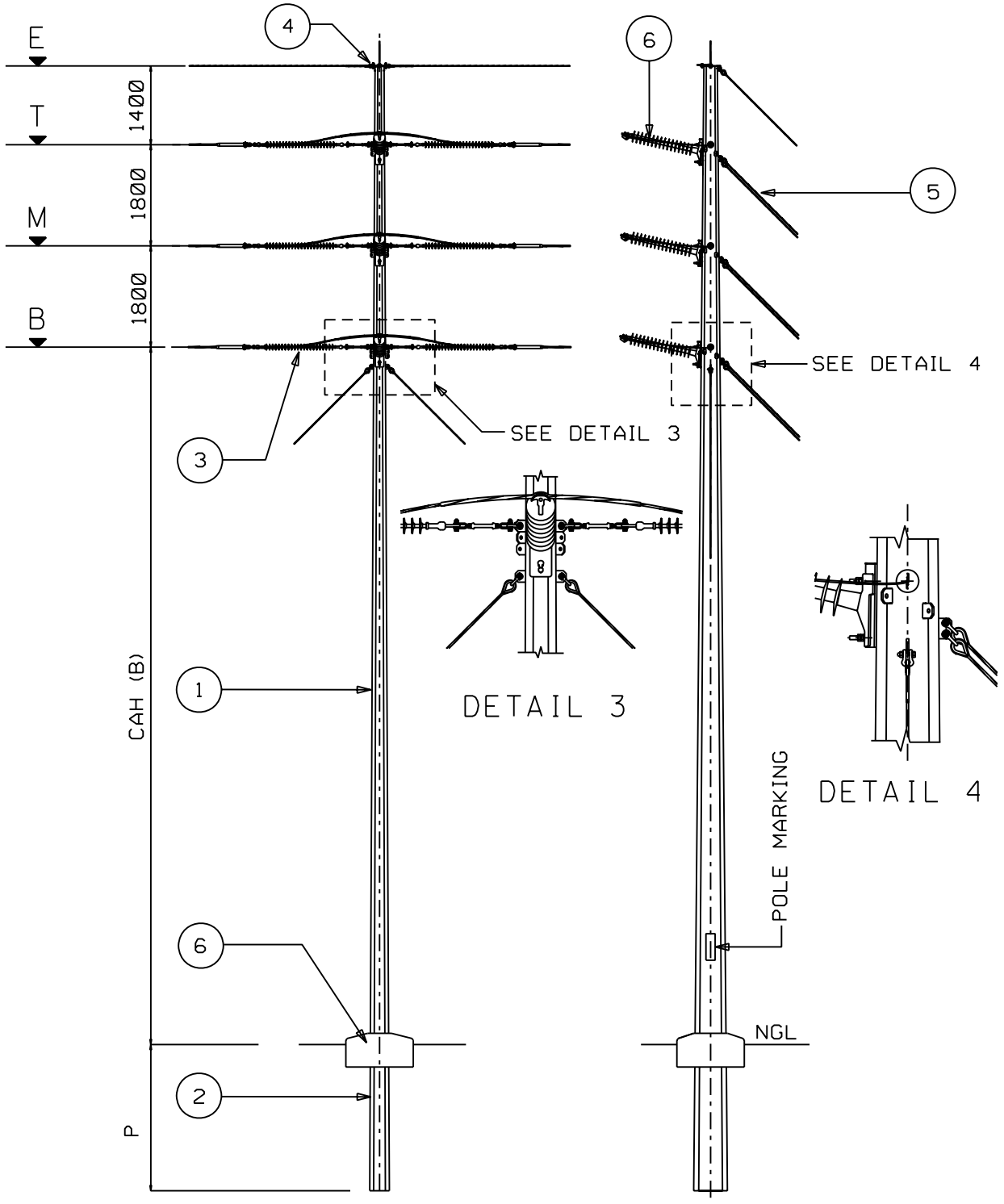

REV	REVISION DESCRIPTION	BY	CHKD	AUTH	DATE	PROJECT NO.
3	SHEET 3 ITEM 2 FOUNDATION DRG. NO.S CORRECTED	P.A.T.	S.MASHABA	B.BRANFIELD	19.03.2010	
2	DRG SHT UPDATED, REFERENCES REVISED, GENERAL REVISION	SLR	RAB	AB	MARCH 2004	

Eskom Distribution

AUTH: A BEKKER
DATE: JAN 2004
CHKD: RAB
DATE: JAN 2004
DRAWN: LMP
DATE: NOV 1998

DISTRIBUTION TECHNOLOGY

RETICULATION/SUB-TRANSMISSION LINES
STAYED ANGLE STRAIN STRUCTURE
GENERAL ARRANGEMENT (0-90°)

SET	SHEET	REVISION
3	1	3

D-DT 7615

A4L

...\User\dgn\dms00379\7615 R3.dgn 2010/03/19 03:01:46 PM

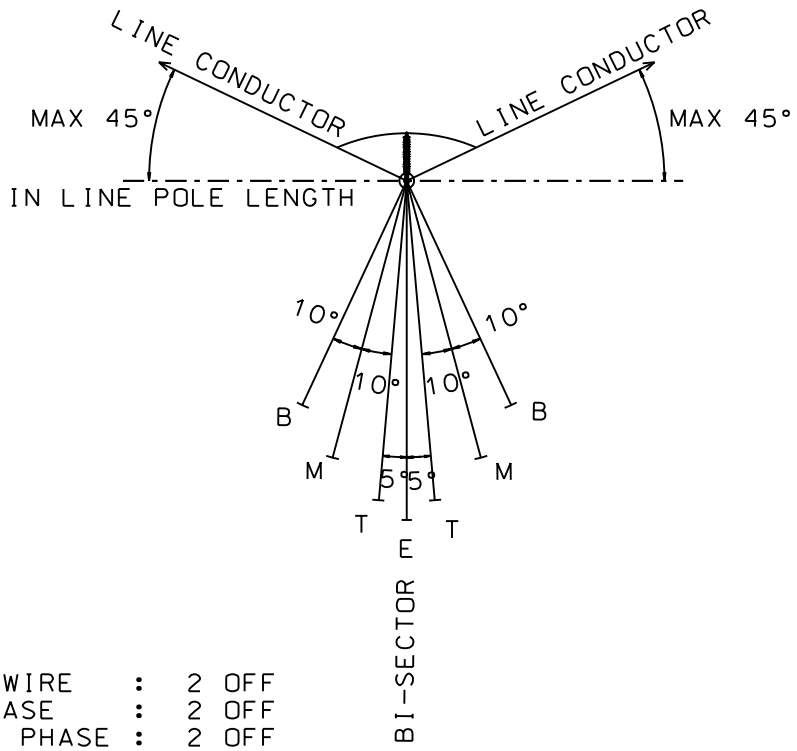

8 STAYS
E) EARTH WIRE : 2 OFF
T) TOP PHASE : 2 OFF
M) MIDDLE PHASE : 2 OFF
B) BOTTOM PHASE : 2 OFF

TOP VIEW

STAY ARRANGEMENT FOR STAYED STRUCTURES

SCHEDULE FOR CONDUCTOR ATTACHMENT HEIGHTS

DESIGN REQUIREMENTS			C A H (m AGL)			
POLE LENGTH L	TIP LOAD (kN)	PLANTING DEPTH P	E	T	M	B
18	23	2.0	16.0	14.6	12.8	11.0
19	23	2.0	17.0	15.6	13.8	12.0
20	23	2.0	18.0	16.6	14.8	13.0
21	23	2.0	19.0	17.6	15.8	14.0
22	23	2.0	20.0	18.6	16.8	15.0
23	23	2.0	21.0	19.6	17.8	16.0
24	23	2.0	22.0	20.6	18.8	17.0

REV	REVISION DESCRIPTION	BY	CHKD	AUTH	DATE	PROJECT NO.
3	SHEET 3 ITEM 2 FOUNDATION DRG. NO.S CORRECTED	P.A.T.	S.MASHABA	B.BRANFIELD	19.03.2010	
2	DRG SHT UPDATED, REFERENCES REVISED, GENERAL REVISION	SLR	RAB	AB	MARCH 2004	

Eskom Distribution

AUTH: A BEKKER
DATE: JAN 2004
CHKD: RAB
DATE: JAN 2004
DRAWN: LMP
DATE: NOV 1998

DISTRIBUTION TECHNOLOGY

RETICULATION/SUB-TRANSMISSION LINES
STAYED ANGLE STRAIN STRUCTURE
DESIGN CRITERIA & STAYS (0-90°)

D-DT 7615	SET	SHEET	REVISION
	3	2	3

A4L

...\User\dgn\dms00379\7615 R3.dgn 2010/03/19 03:02:27 PM

ITEM NØ.	DESCRIPTION	D-DT NØ.
	STRUCTURE	
	TYPE 259D	D-DT 7615
	MANUFACTURER: STRUCTATECH	
	TYPE 261D	D-DT 7615
	MANUFACTURER: CIS	
1	POLE LENGTH (BODY)	
	18m STEEL	D-DT 7104
	19m STEEL	D-DT 7104
	20m STEEL	D-DT 7104
	21m STEEL	D-DT 7104
	22m STEEL	D-DT 7104
	23m STEEL	D-DT 7104
	24m STEEL	D-DT 7104
2	FOUNDATION	
	TYPE 1 (300kPa)	D-DT 7851 SHT 2
	TYPE 2 (150kPa)	D-DT 7851 SHT 3
	TYPE 3 (100kPa)	D-DT 7851 SHT 4
	TYPE 4 (50kPa)	D-DT 7851 SHT 5
	ROCK & SOFT ROCK	D-DT 7851 SHT 1
3	INSULATOR ASSEMBLY	
	STRAIN ASSEMBLY	D-DT 7311
4	EARTH WIRE ASSEMBLIES	
	STRAIN NON INSULATED	D-DT 7323
	STRAIN INSULATED	D-DT 7324
5	STAY ASSEMBLY/LOCATION	D-DT 7325/7346
6	JUMPER ASSEMBLY	D-DT 7321
7	CONCRETE CAP AND EARTHING	D-DT 7857

REV	REVISION DESCRIPTION	BY	CHKD	AUTH	DATE	PROJECT NO.
3	SHEET 3 ITEM 2 FOUNDATION DRG. NO.S CORRECTED	P.A.T.	S.MASHABA	B.BRANFIELD	19.03.2010	
2	DRG SHT UPDATED. REFERENCES REVISED. GENERAL REVISION	SLR	RAB	AB	MARCH 2004	

Eskom Distribution

AUTH: A BEKKER
DATE: JAN 2004
CHKD: RAB
DATE: JAN 2004
DRAWN: LMP
DATE: NOV 1998

DISTRIBUTION TECHNOLOGY

RETICULATION/SUB-TRANSMISSION LINES
STAYED ANGLE STRAIN STRUCTURE
REFERENCE TABLE (Ø-90°)

	SET	SHEET	REVISION
D-DT 7615	3	3	3

A4L

...\User\dgn\dms00379\7615 R3.dgn 2010/03/19 03:02:45 PM